Installation Manual

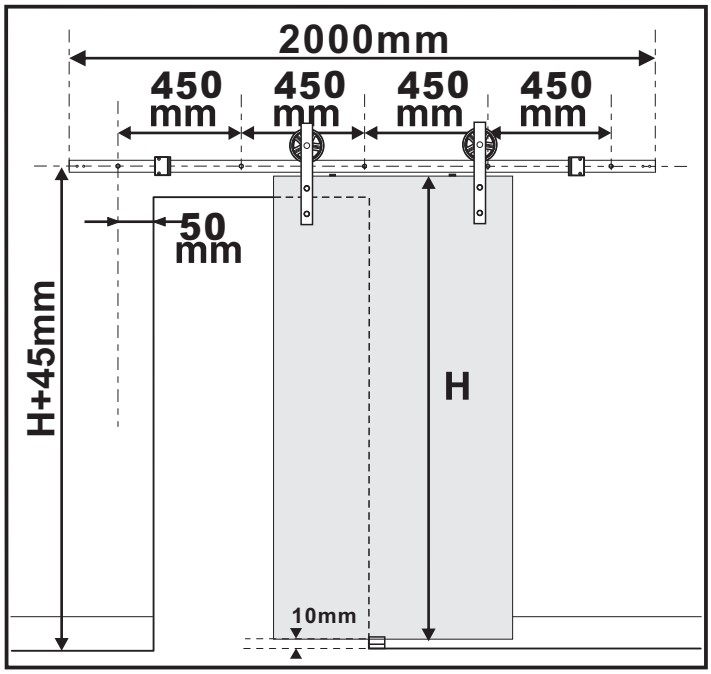

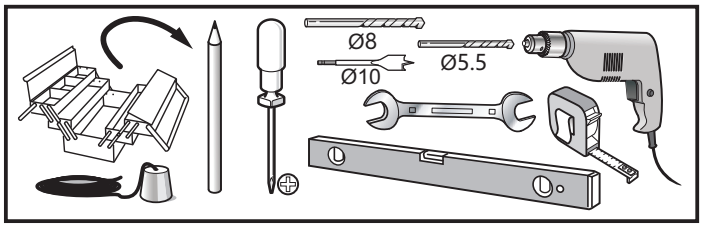

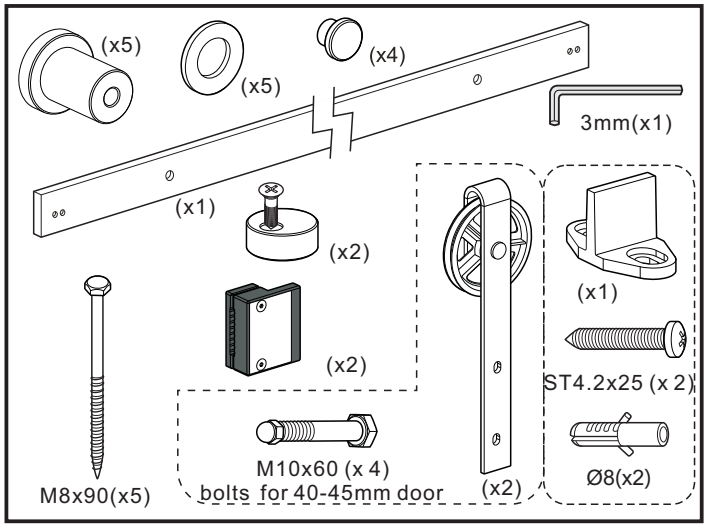

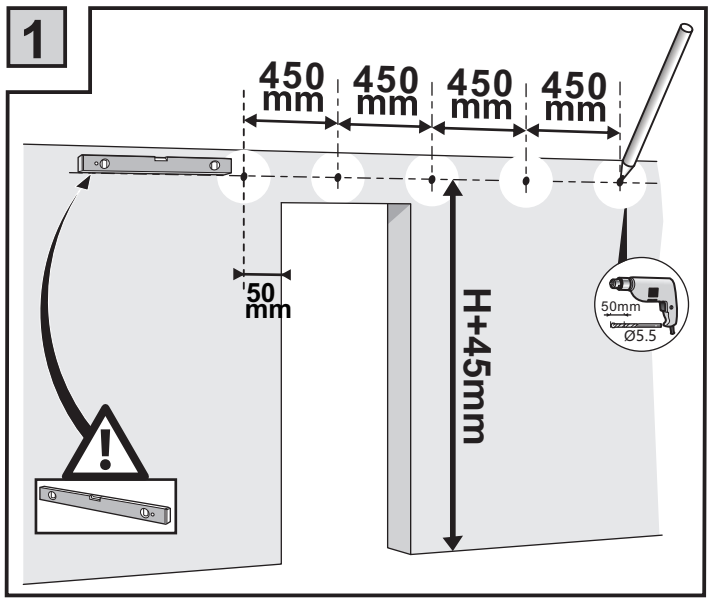

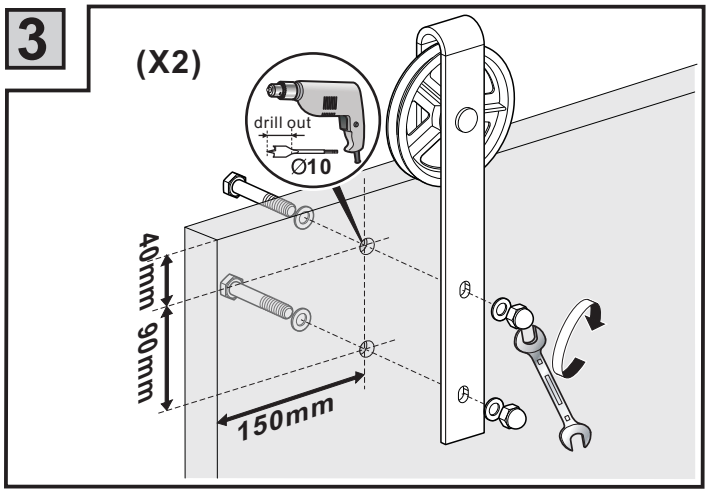

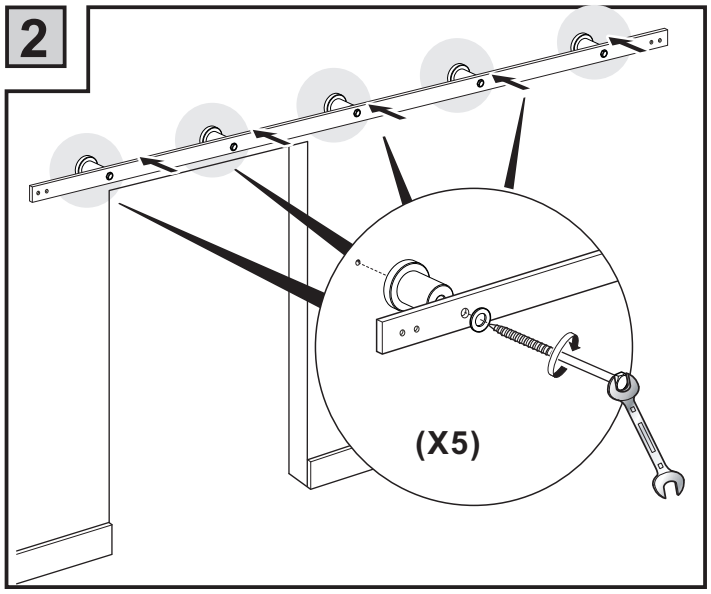

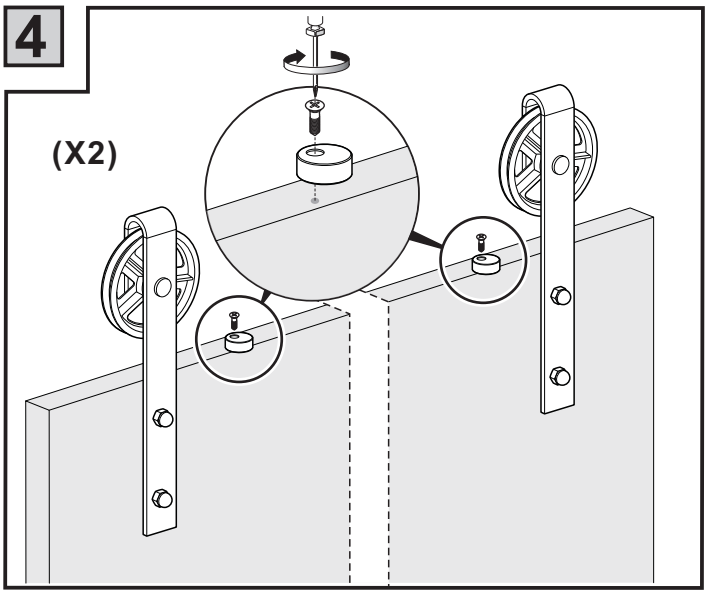

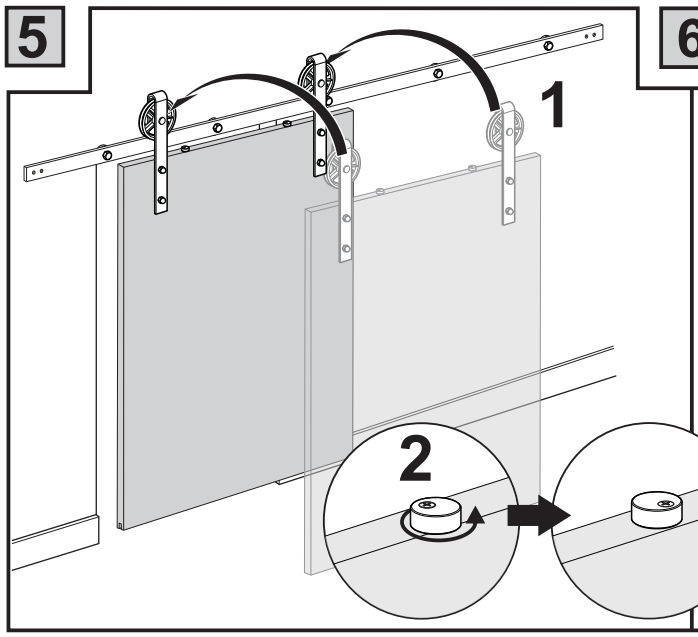
5
1
2

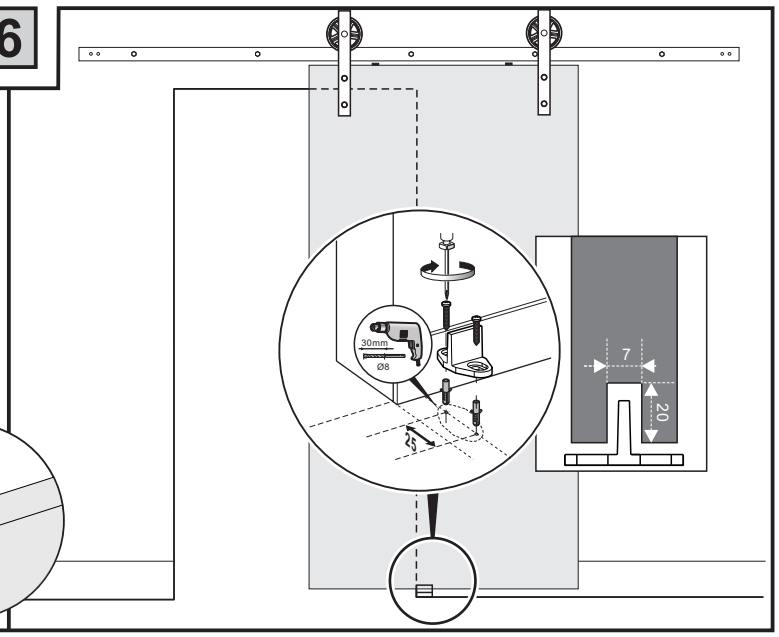
6
30mm
Ø8
7
20

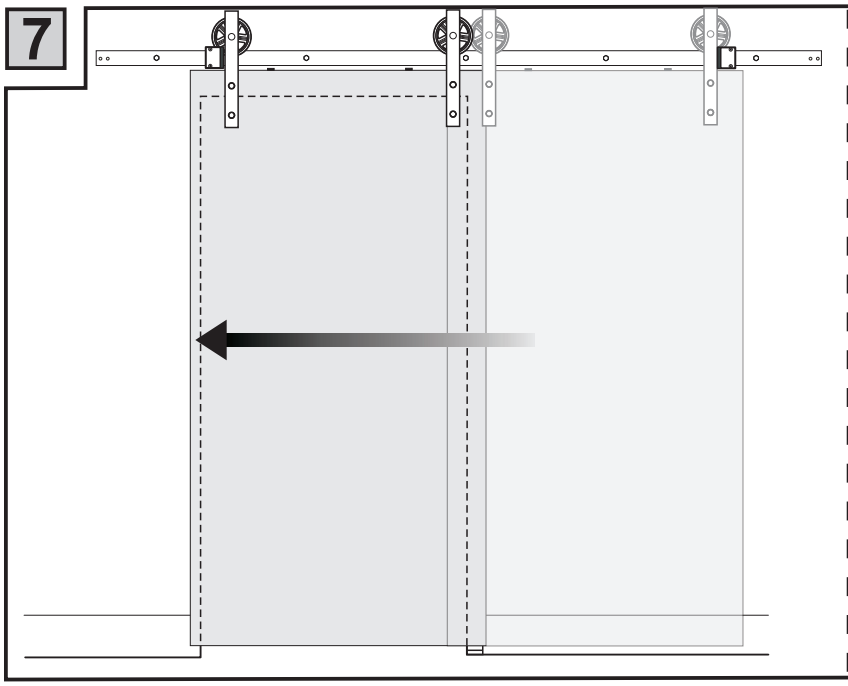
7

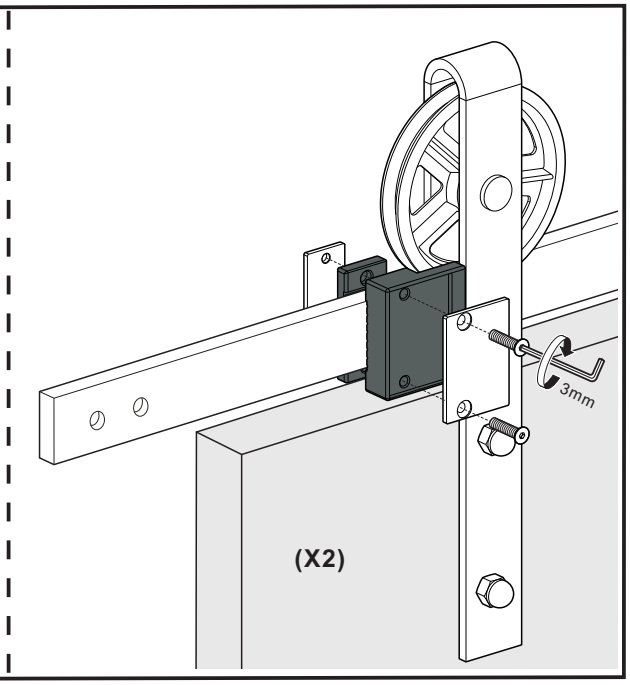
3mm
(X2)

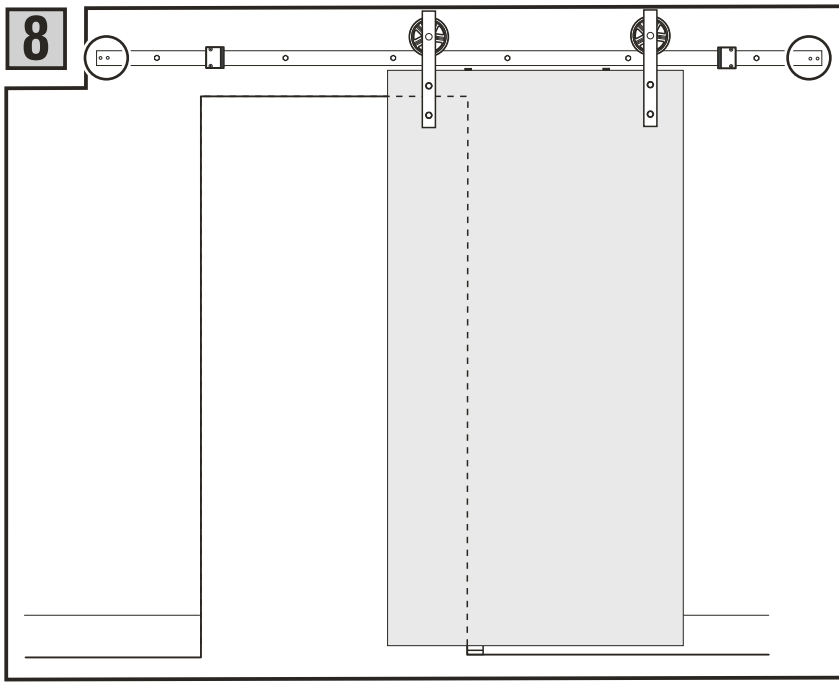
8

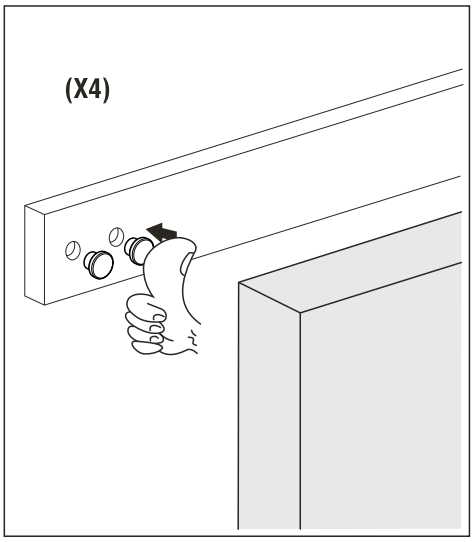
(X4)